SKETCH/AREA TABLE ADDENDUM

Parcel No **5/5/09** File No **2860654**

SUBJECT

Property Address	**28-37-17-28- -158**				
City	**W. Melbourne**	County	**BREVARD**	State **FL**	Zip **32904**
Owner	**NA**				
Client	**13**	Client Address	**1724 SUMTER LANE**		
Appraiser Name	**EWI**	Inspection Date	**PALM BAY**		

IMPROVEMENTS SKETCH

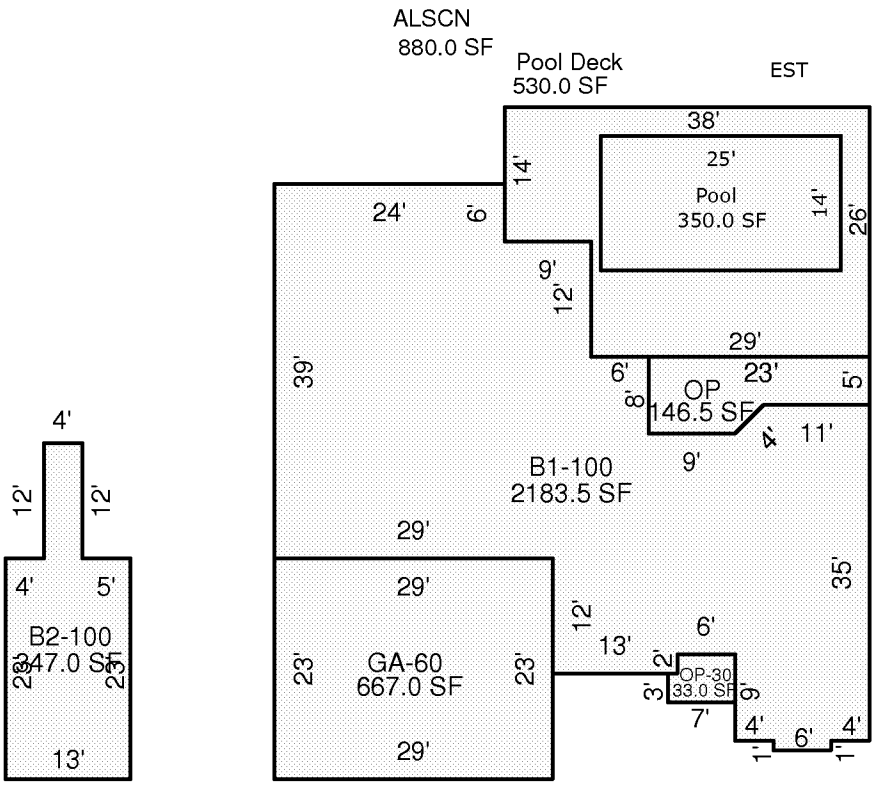

Scale: **1 = 20**

AREA CALCULATIONS

AREA CALCULATIONS SUMMARY

Code	Description	Factor	Net Size	Perimeter	Net Totals
B1	B1-100	1.00	2183.5	250.2	2183.5
B2	B2-100	1.00	347.0	96.0	347.0
OP	OP	1.00	146.5	60.2	146.5
ALSCN	ALSCN	1.00	880.0	128.0	880.0
PDECK	Pool Deck	1.00	530.0	128.0	530.0
POOL	Pool	1.00	350.0	78.0	350.0
GA7	GA-60	1.00	667.0	104.0	667.0
OP4	OP-30	1.00	33.0	24.0	33.0

Comment Table 1

Comment Table 2 | Comment Table 3