SKETCH/AREA TABLE ADDENDUM

File No **2845780**

SUBJECT

Property Address	**28-37-34-FT-165-9**		
City **Palm Bay**	County **BREVARD**	State **FL**	Zip **32907**
Owner			
Client		Client Address	**411 GEORGES AVE. NE**
Appraiser Name **AEC**		Inspection Date	**PALM BAY**

IMPROVEMENTS SKETCH

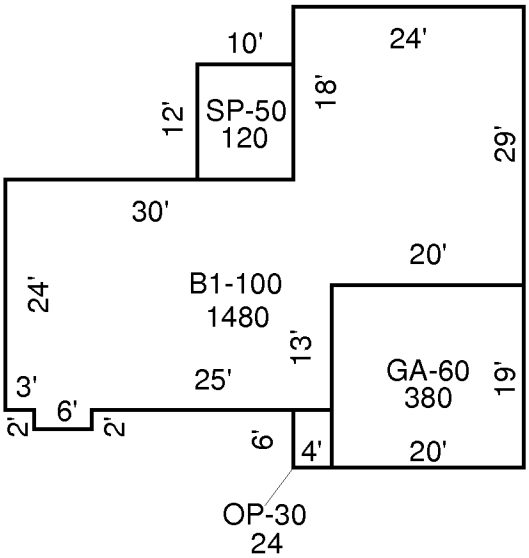

AREA CALCULATIONS

AREA CALCULATIONS SUMMARY

Code	Description	Factor	Net Size	Perimeter	Net Totals
B1	B1-100	1.00	1480	196	1480
GA7	GA-60	1.00	380	78	380
OP4	OP-30	1.00	24	20	24
SP6	SP-50	1.00	120	44	120

Comment Table 1

Comment Table 2

Comment Table 3