SKETCH/AREA TABLE ADDENDUM

DATE RE #

SUBJECT

PARCEL ID **2815827**			
CITY	COUNTY	STATE	ZIP
PERMIT # **9/23/2011**			
MARKET AREA	ADDRESS		
APPRAISER NAME **THL**			

IMPROVEMENTS SKETCH

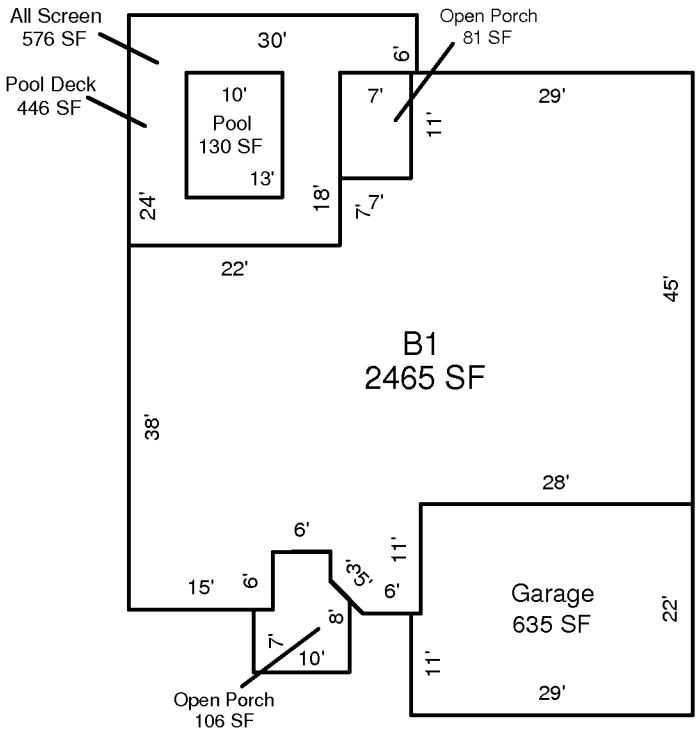

Scale: **1" = 12'**

AREA CALCULATIONS

AREA CALCULATIONS SUMMARY

Code	Description	Factor	Net Size	Perimeter	Net Totals
B1	B1	1.00	2465	240	2465
GA	Garage	1.00	635	103	635
OP	Open Porch	1.00	106	44	
	Open Porch	1.00	81	37	187
ALSCN	All Screen	1.00	576	108	576
PDECK	Pool Deck	1.00	446	108	446
POOL	Pool	1.00	130	46	130

Comment Table 1

Comment Table 2 | Comment Table 3