SKETCH/AREA TABLE ADDENDUM

File No **26200791**

SUBJECT

Property Address	**26-36-10-RA-B-24**		
City		State	Zip
Owner	**SFR 7-20-99 OCOO86884 $102,125 10-21-99**		
Client		Client Address	**1113 EGRET LAKE WAY**
Appraiser Name	**GLENN LEGGE**	Inspection Date	**VIERA (PERMITS)**

IMPROVEMENTS SKETCH

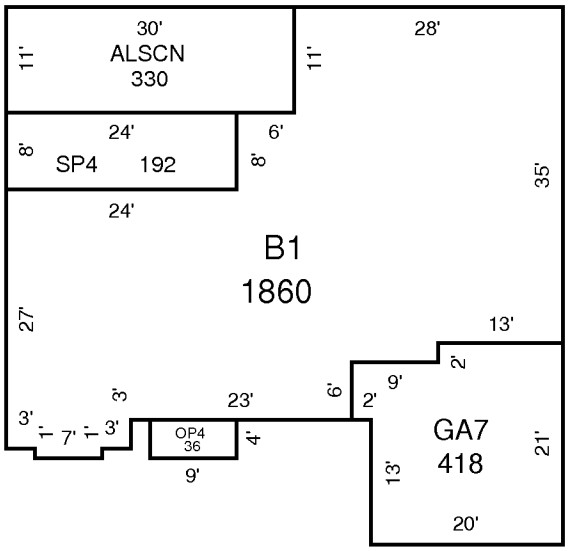

DRAWN: GNL 12-2-99

AREA CALCULATIONS

AREA CALCULATIONS SUMMARY

Code	Description	Factor	Net Size	Perimeter	Net Totals
B1	B1-100	1.00	1860	210	1860
GA7	GA-60	1.00	418	86	418
OP4	OP-30	1.00	36	26	36
SP4	SP-40	1.00	192	64	192