SKETCH/AREA TABLE ADDENDUM

SUBJECT

PARCEL ID **2619677**		
CITY	STATE	ZIP
PERMIT # **9/28/2011**		
MARKET AREA		
APPRAISER NAME **AEB**		

IMPROVEMENTS SKETCH

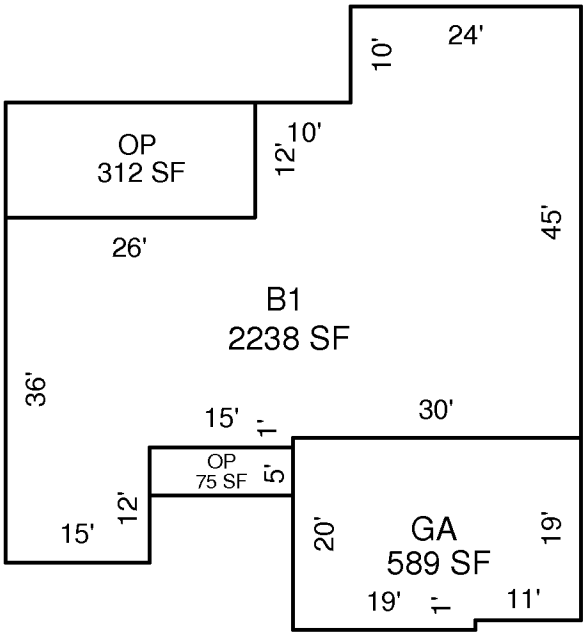

Scale: **1" = 12'**

AREA CALCULATIONS

AREA CALCULATIONS SUMMARY

Code	Description	Factor	Net Size	Perimeter	Net Totals
B1	B1-100	1.00	2238	236	2238
OP4	OP-30	1.00	75	40	75
SP4	SP-40	1.00	312	76	312
GA7	GA-60	1.00	589	100	589