SKETCH/AREA TABLE ADDENDUM

File No **26173801**

SUBJECT

Property Address	**26-36-14-PU-C-36**				
City		County	**BREVARD**	State **FL**	Zip
Owner	**SFR 1-26-00 OCOO93207 $221,900**				
Client		Client Address	**441 BIRCHINGTON LANE**		
Appraiser Name	**GLENN LEGGE**	Inspection Date	**VIERA, (PERMITS)**		

IMPROVEMENTS SKETCH

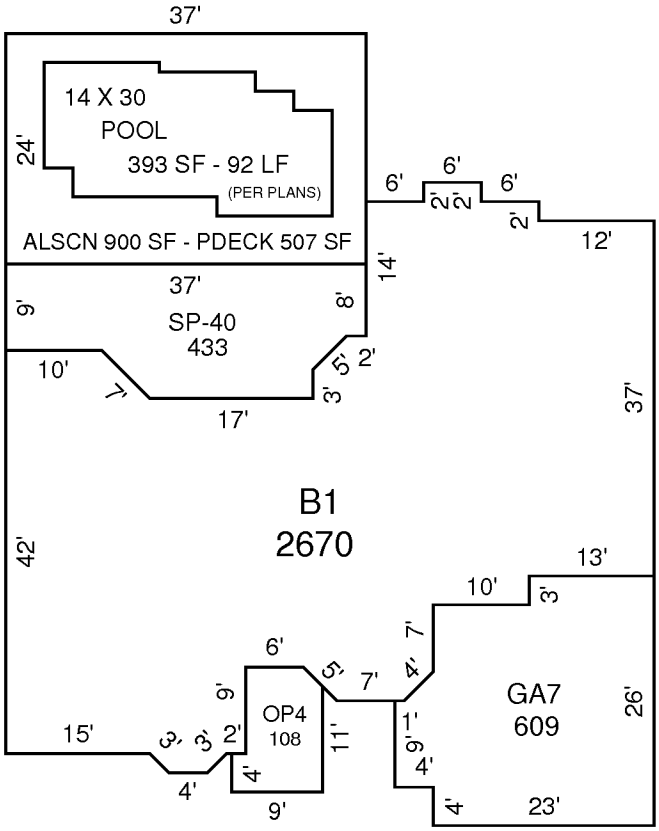

DRAWN: GNL 5-23-00

AREA CALCULATIONS

AREA CALCULATIONS SUMMARY

Code	Description	Factor	Net Size	Perimeter	Net Totals
B1	B1-100	1.00	2670	264	2670
GA7	GA-60	1.00	609	104	609
OP4	OP-30	1.00	108	44	108
SP4	SP-40	1.00	433	98	433
ALSCN	All Screen	1.00	900	123	900
POOLS	Pool	1.00	393	92	393