SKETCH/AREA TABLE ADDENDUM

DATE **09/28/2010** RE # **26141271**

SUBJECT

PARCEL ID **26-36-03-OY-E-54**

CITY **MELBOURNE** COUNTY **BREVARD** STATE **FL** ZIP **32940**

PERMIT # **SFR 3-17-99 OCOO82573 $110,000 6-14-99**

MARKET AREA **092019** ADDRESS **1907 CRANE CREEK BLVD.**

APPRAISER NAME **MLL** BRANCH OFFICE **PALM BAY**

IMPROVEMENTS SKETCH

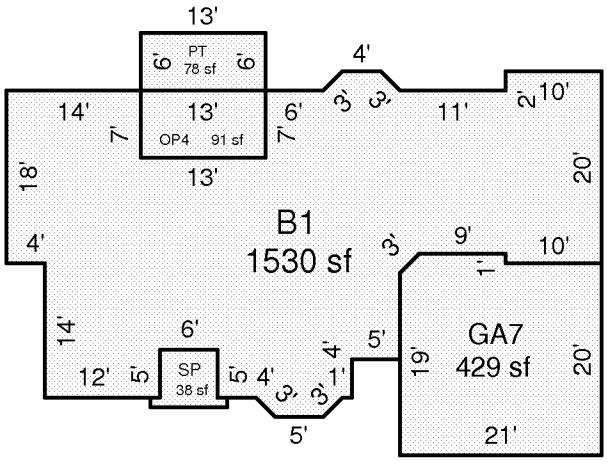

Scale: **1 = 20**

AREA CALCULATIONS

AREA CALCULATIONS SUMMARY

Code	Description	Factor	Net Size	Perimeter	Net Totals
B1	B1-100	1.00	1530	220	1530
OP	SP	1.00	38	28	38
PT	PT-05	1.00	78	38	78
OP4	OP-30	1.00	91	40	91
GA7	GA-60	1.00	429	83	429