SKETCH/AREA TABLE ADDENDUM

DATE **10/6/10** RE # **2601171**

SUBJECT

PARCEL ID **26 360377 J. 21.**			
CITY **MELBOURNE**	COUNTY **BREVARD**	STATE **FL**	ZIP **32940**
PERMIT # **NA**			
MARKET AREA **9**	ADDRESS **1645 PIONEER DR**		
APPRAISER NAME **EWI**	BRANCH OFFICE **PALM BAY**		

IMPROVEMENTS SKETCH

EST FROM PICTOMETRY

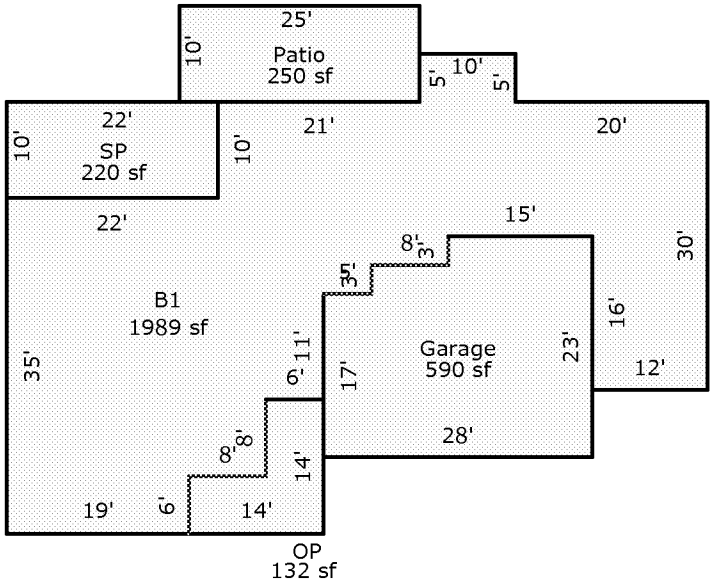

Scale: **1 = 20**

AREA CALCULATIONS

AREA CALCULATIONS SUMMARY

Code	Description	Factor	Net Size	Perimeter	Net Totals
B1	B1	1.00	1989	278	1989
GA	Garage	1.00	590	102	590
OP	OP	1.00	132	56	132
PT	Patio	1.00	250	70	250
SP	SP	1.00	220	64	220

Comment Table 1

Comment Table 2 | Comment Table 3