SKETCH/AREA TABLE ADDENDUM

File No **25166211**

SUBJECT

Property Address	**25-37-10-00-32**				
City		County	**BREVARD**	State **FL**	Zip
Owner					
Client	**52**				
Appraiser Name	**jar**	Inspection Date	**viera**		

IMPROVEMENTS SKETCH

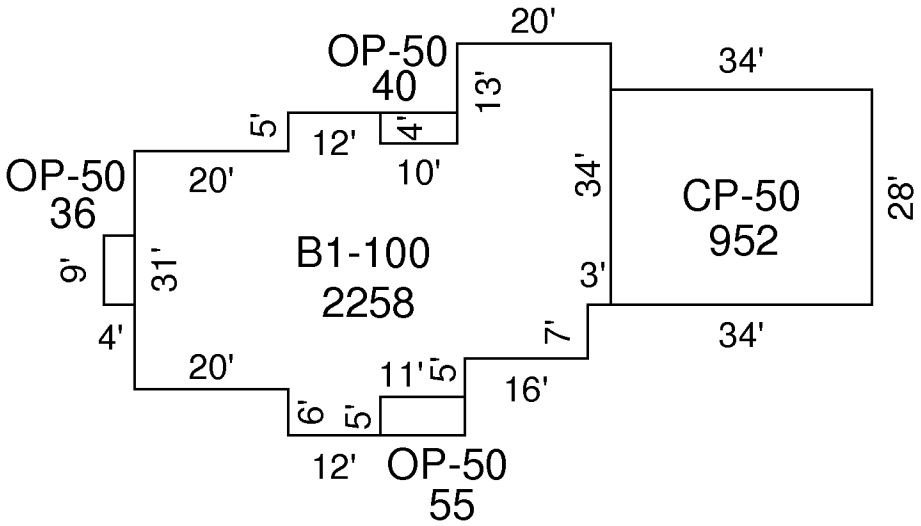

AREA CALCULATIONS

AREA CALCULATIONS SUMMARY

Code	Description	Factor	Net Size	Perimeter	Net Totals
B1	B1-100	1.00	2258	234	2258
OP7	OP-50	1.00	55	32	
	OP-50	1.00	36	26	
	OP-50	1.00	40	28	131
CP7	CP-50	1.00	952	124	952