SKETCH/AREA TABLE ADDENDUM

SUBJECT

PARCEL ID **2206725**			
CITY		STATE	ZIP
PERMIT # **102011**			
MARKET AREA			
APPRAISER NAME **JCA**		BRANCH OFFICE **TITUSVILLE**	

IMPROVEMENTS SKETCH

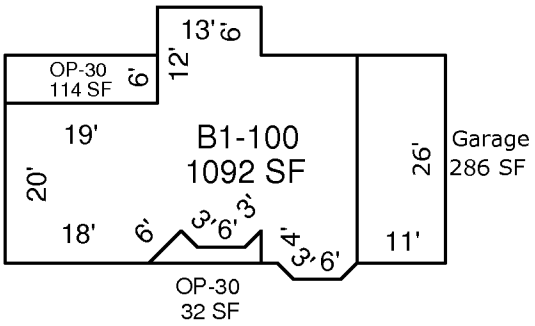

Scale: **1" = 12'**

AREA CALCULATIONS

AREA CALCULATIONS SUMMARY

Code	Description	Factor	Net Size	Perimeter	Net Totals
B1	B1-100	1.00	1092	183	1092
GA	Garage	1.00	286	74	286
OP4	OP-30	1.00	32	35	
	OP-30	1.00	114	50	146